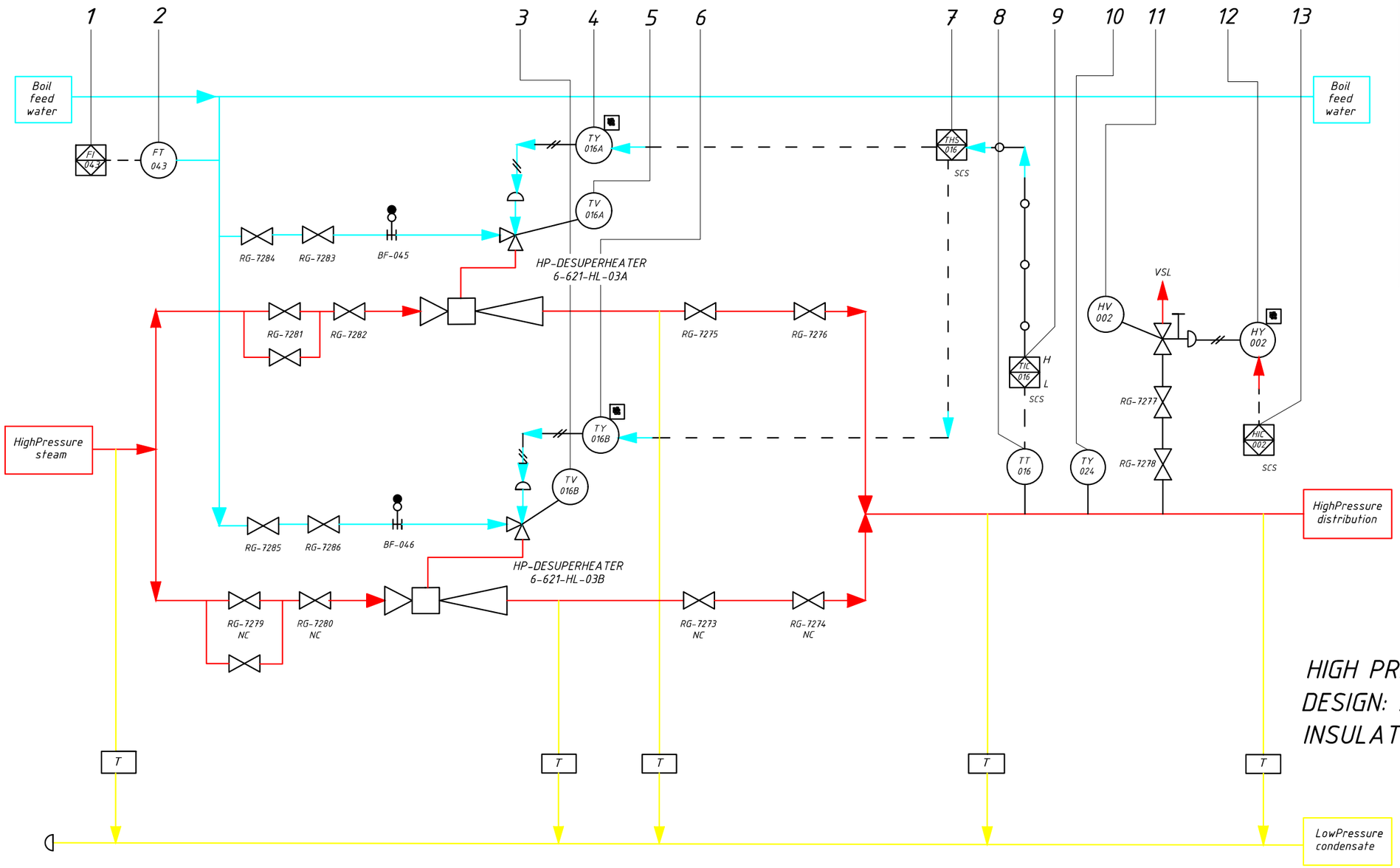

Designation	Name	Quantity	Notes
1	(FI-043) Flow rate indicator	1	OMICRON SENSING PRIVATE LIMITED
2	(FT-043) Flow rate transmitter	1	OMICRON SENSING PRIVATE LIMITED
3, 5	(TV-016) Temperature control valve	2	HGZK
4, 6	(TY-016) Temperature Rely	2	HGZK
7	(THS-016) Temperature hand switch	1	HGZK
8	(TT-016) Temperature transmitter	1	HGZK
9	(TIC-016) Temperature indicator controller	1	HGZK
10	(TY-024) Temperature Rely	1	HGZK
11	(HV-002) Hand control valve	1	HGZK
12	(HY-002) Hand Rely	1	HGZK
13	(HIC-002) Hand indicator controller	1	HGZK

HL-03A/B
HIGH PRESSURE DESUPERHEATER
DESIGN: ATM./40.0kPag VAC. @277°C
INSULATION: NONE

			1	2	3	4	5	6	7	8	9	10	11	12	13
Instruments on field				FT 043	TV 016B	TY 016A	TV 016A	TY 016B		TT 016		TY 024	HV 002	HY 002	
Control room	Instruments on board		FI 043						THS 016		TIC 016				HIC 002
	Modicon M340 controller	Ethernet													
		Input AI													
		Input DI													
		Output AO													
		Output DO													

Change	Sheet	Number of doc.	Sign	Date
Designed by		Fazkullin F.		
Checked by		Butakova D.A.		
N.control		Butakova D.A.		
Confirmed		Butakova D.A.		

SIS#4
Variant #18

Letter	Mass	Scale
		1:1
Sheet 1		Sheets 1

KBTU SITE
Automation and Control

A3 Format (420 X 297mm. / 16.5 X 11.7")